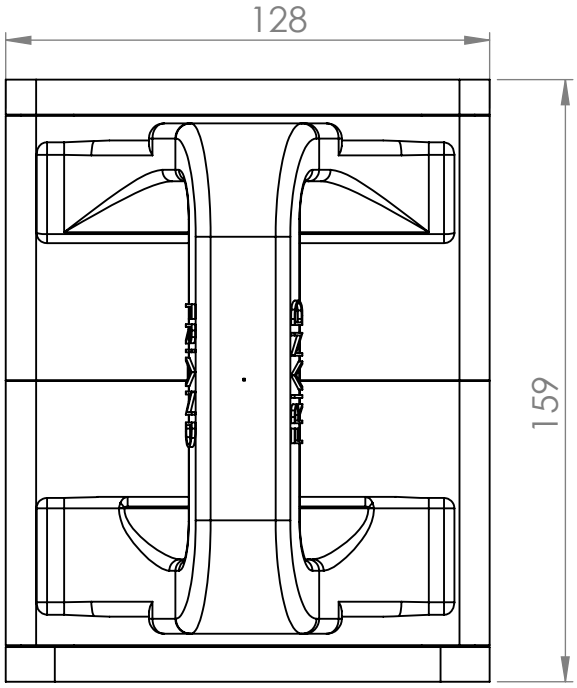

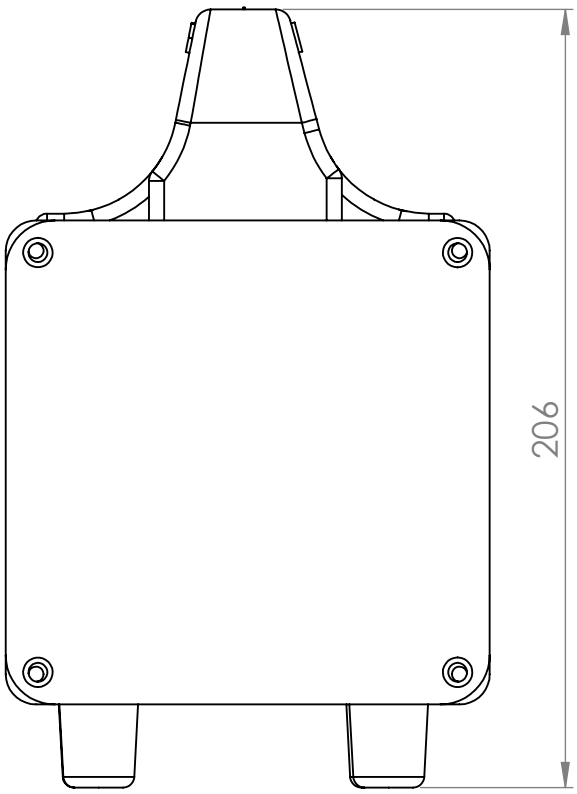

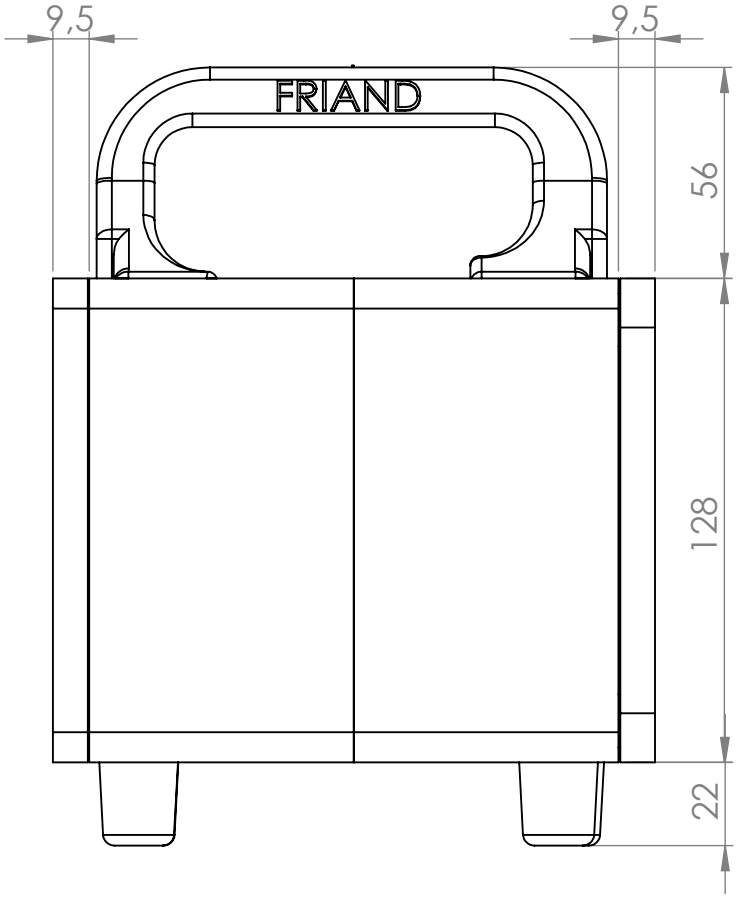

UNLESS OTHERWISE SPECIFIED: DIMENSIONS ARE IN MILLIMETERS SURFACE FINISH: TOLERANCES: LINEAR: ANGULAR:	FINISH:				DEBUR AND BREAK SHARP EDGES	DO NOT SCALE DRAWING / REVISION
	NAME	SIGNATURE	DATE			TITLE: FRIAND ELEKTROTECHNIEK BV Van Rensselaerweg 4a NL 6956 AV Spankeren (Dieren) Tel.: +31 (0)313-420578 Fax: +31 (0)313-421040 Email: friand@friand.nl
DRAWN						
CHK'D						
APPV'D						
MFG						
Q.A				MATERIAL:		DWG NO. C08 / A4
				WEIGHT:		SCALE:1:5 / SHEET 1 OF 1